SENSOTEC portfolio

Smart sensor solutions for recessed and surface-mounted luminaires

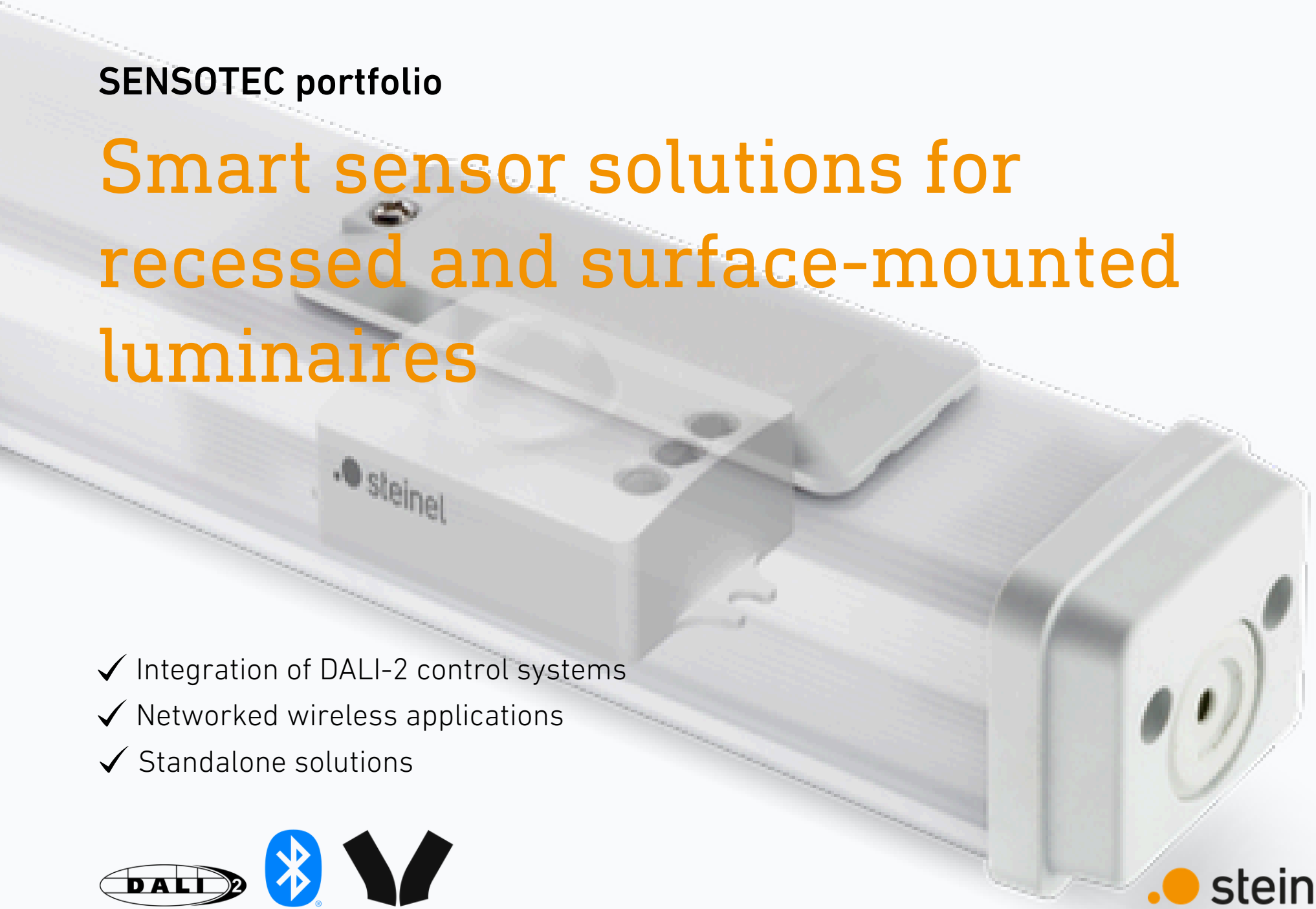

- ✓ Integration of DALI-2 control systems
- ✓ Networked wireless applications
- ✓ Standalone solutions

steinel

Product families

The SENSOTEC portfolio from STEINEL Solutions offers luminaire manufacturers a flexible and easy-to-install solution for equipping luminaires with precise sensor intelligence – without compromising on design.

Monoblock

Application Controller

Monoblock sensors are compact sensors with highly developed HF antenna technology and integrated controllers. They enable simple and energy-efficient local luminaire control.

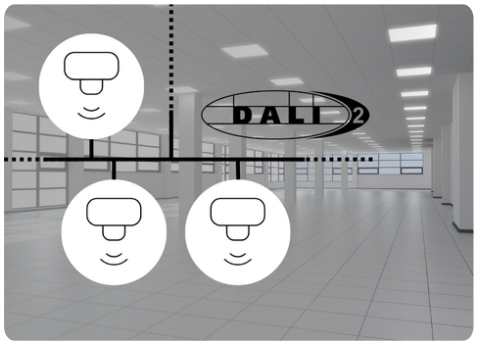

IPD

Input Device

As DALI-2 Input Devices, IPD sensors reliably detect presence, motion and ambient light. They can be integrated into building management systems and provide efficient control of modern lighting solutions.

NET wireless Mesh

Application Controller

NET sensors connect wirelessly via mesh networks from third-party providers such as Bluetooth or Wirepas. They can be conveniently configured via an app and control directly connected DALI luminaires.

Reasons for STEINEL sensors

STEINEL stands for quality: sensor quality and product durability. Discover smart sensor solutions for the demand-based control of modern lighting systems.

- DALI-2 certified, combinable with all other tools certified according to this standard
- Small and compact light-integrated and surface-mounted sensors for invisible installation in the luminaire
- Available for various ecosystems
- PIR & HF technologies from a single source provide the same design and fewer interfaces
- Radio and sensor technology combined
- STEINEL is an established European sensor supplier

Monoblock (Application Controller)

Monoblock sensors are compact sensors with highly developed high-frequency antenna technology and integrated controls. The integrated control system enables the connected light fitting to be controlled based on presence and ambient light levels.

Monoblock-Sensoren

- **Reliable HF presence sensors for luminaire installation**
- **Simple control of individual luminaires**
- **Relay output (230V), DALI output with light control**
- **Accessories: Service and user remote control**

Patch antenna | max. 5m detection range

MB HF1 COM1

Integrated control of the 230V relay

MB HF1 DALI-2

DALI control with constant light control

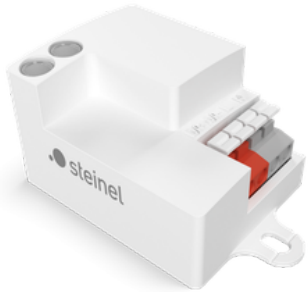

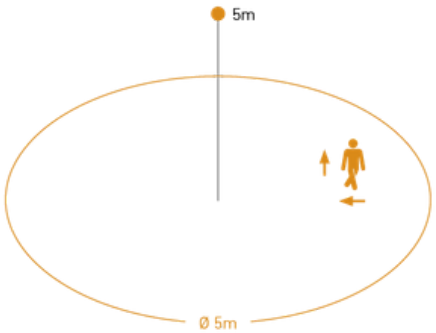

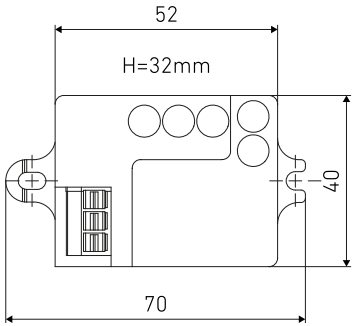

Rod antenna | max. 8m detection range

MB HF2 COM1

Integrated control of the 230V relay

MB HF2 DALI-2

DALI control with constant light control

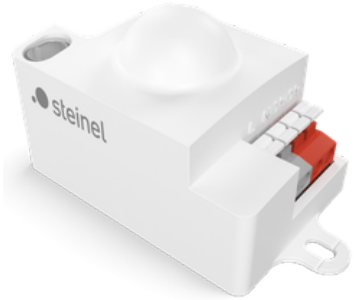

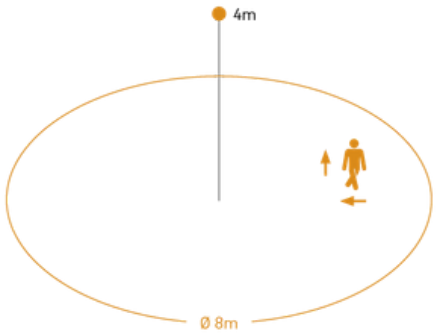

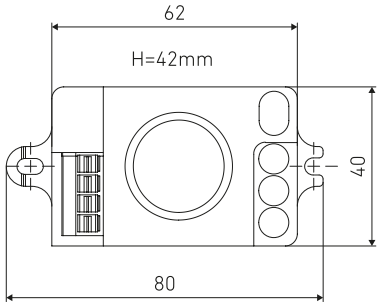

IPD (Input Device)

IPD sensors reliably detect presence, movement and ambient light. As DALI-2 input devices, they can be integrated into building management systems and ensure efficient control of modern lighting solutions.

IPD sensors

- **Proven PIR or HF presence sensors for luminaire installation**
- **DALI-2 input device for presence (type 3) and light (type 4)**
- **Products for offices, staircases, car parks**

HF2

RF sensor module with a detection range of up to 8m at a maximum height of 3.5m. The presence detection is through glass and non-metallic materials. Ideal for inside luminaires.

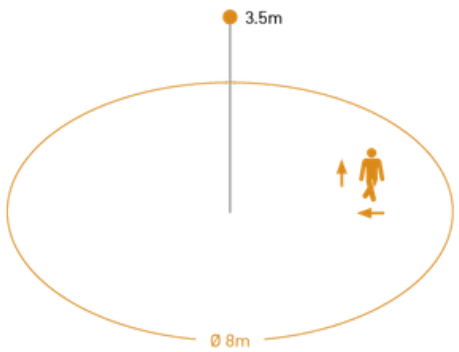

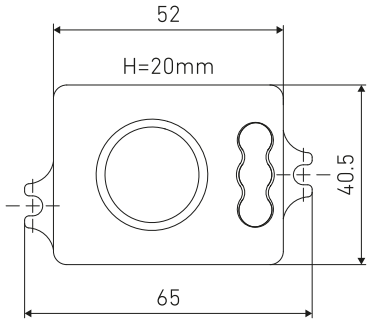

IPD sensors highbay

- **Reliable PIR sensors with a long range for highbay applications**
- **Optimised for mounting heights of up to 14m**
- **Optimised for round and narrow, long detection areas**

HB PIR 3360

Reliable highbay motion detector with a long range, ideal for high ceilings in industrial buildings or commercial properties.
For installation heights of up to 14m and a maximum detection area with a diameter of 36m. Monitors up to 1000sqm.
Connection: Zhaga

HB PIR 345

Reliable highbay motion detector, ideal for great heights in warehouses, machine shops, check-in and waiting halls. For mounting heights of up to 14m and a rectangular detection area of up to 30x4m.
Connection: Zhaga

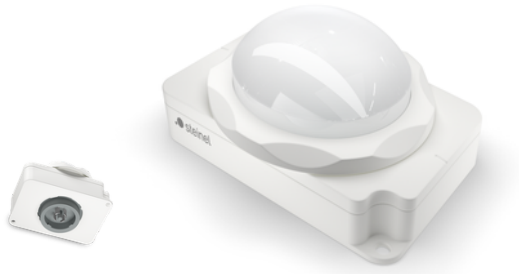

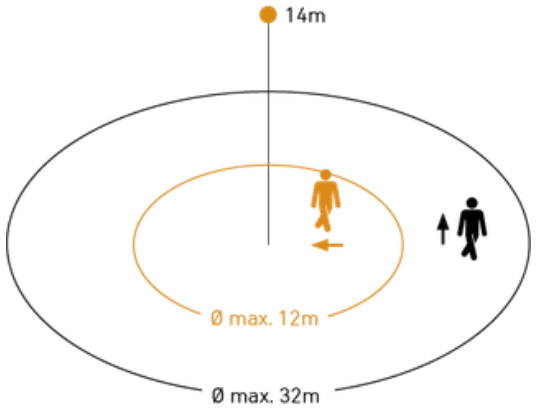

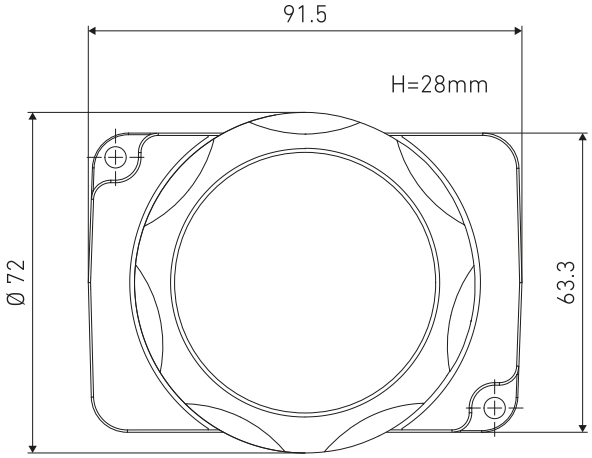

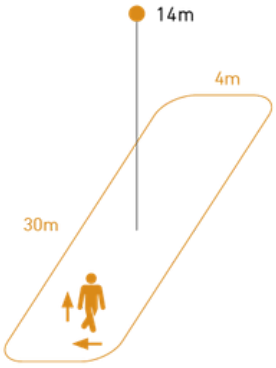

NET wireless Mesh (Application Controller)

NET sensors connect wirelessly via mesh networks from third-party providers such as Bluetooth or Wirepas. They can be conveniently configured via an app and control directly connected DALI luminaires.

NET sensors

- **Proven PIR or HF presence sensors with constant light control**
- **DALI interface/control**
- **Products for offices, staircases, car parks**

PIR

Unobtrusive PIR presence detector with a detection area of 4x4m (movement 6x6m). Compact and reliable recessed luminaire sensor for applications up to a maximum height of 5m.

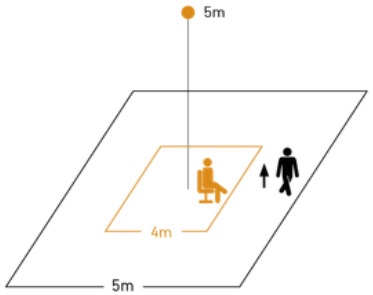

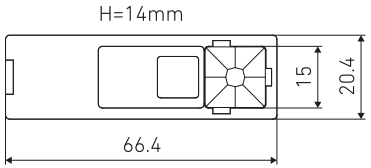

HF2

RF sensor module with a detection range of up to 8m at a maximum height of 3.5m. The presence detection is through glass and non-metallic materials. Ideal for inside luminaires.

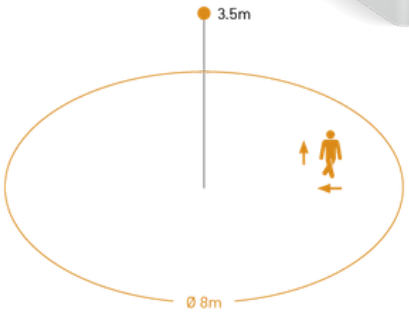

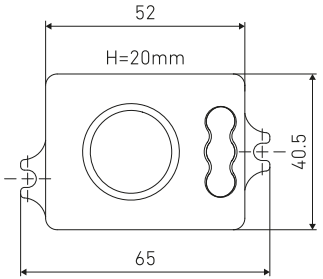

Extension

The extension is used to expand the Bluetooth Mesh network and is intended for DALI luminaires without sensors.

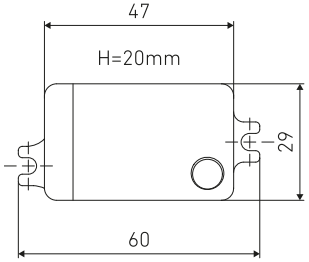

NETsensors highbay

- **Reliable PIR sensors with a long range for highbay applications**
- **Optimised for mounting heights of up to 14m**
- **Optimised for round and narrow, long detection areas**

HB PIR 3360

Reliable highbay motion detector with a long range, ideal for high ceilings in industrial buildings or commercial properties.
For installation heights of up to 14m and a maximum detection area with a diameter of 36m. Monitors up to 1000sqm.

HB PIR 345

Reliable highbay motion detector, ideal for great heights in warehouses, machine shops, check-in and waiting halls. For mounting heights of up to 14m and a rectangular detection area of up to 30x4m.

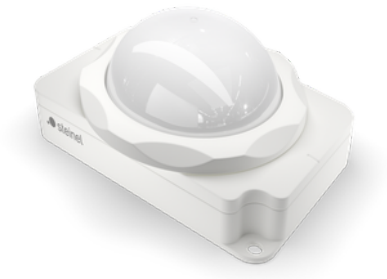

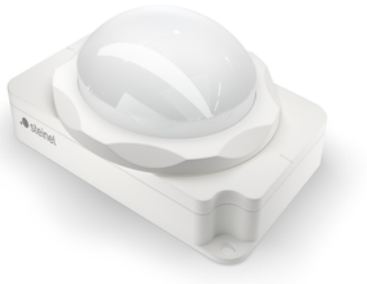

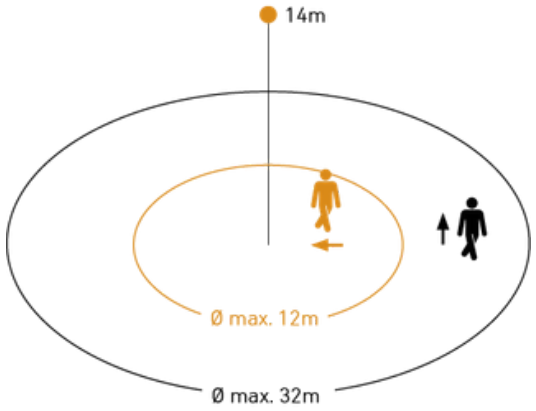

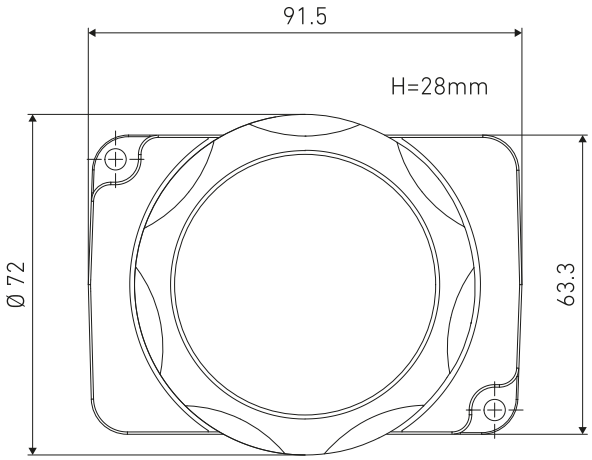

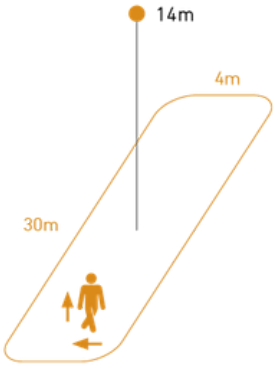

Connection variants

Both highbay sensors are available in the Wire and Intra versions with wires for luminaire installation and as a Zhaga variant for luminaire mounting.

Wire

Zhaga

Intra

NET sensors ecosystems

- **Reliable control of sensors via remote access and on-site via radio connection**
- **Configuration and management of sensors via desktop application or mobile**
- **devices such as tablets and smartphones**

Thanks to the compatibility of the respective SENSOTEC sensors with different ecosystems, you get maximum flexibility and a wide range of options for integrating sensor solutions. The SENSOTEC sensor takes control of the directly connected DALI luminaires, enabling efficient and intelligent lighting control.

Technology Partner SILVAIR

INGY

CASAMBI

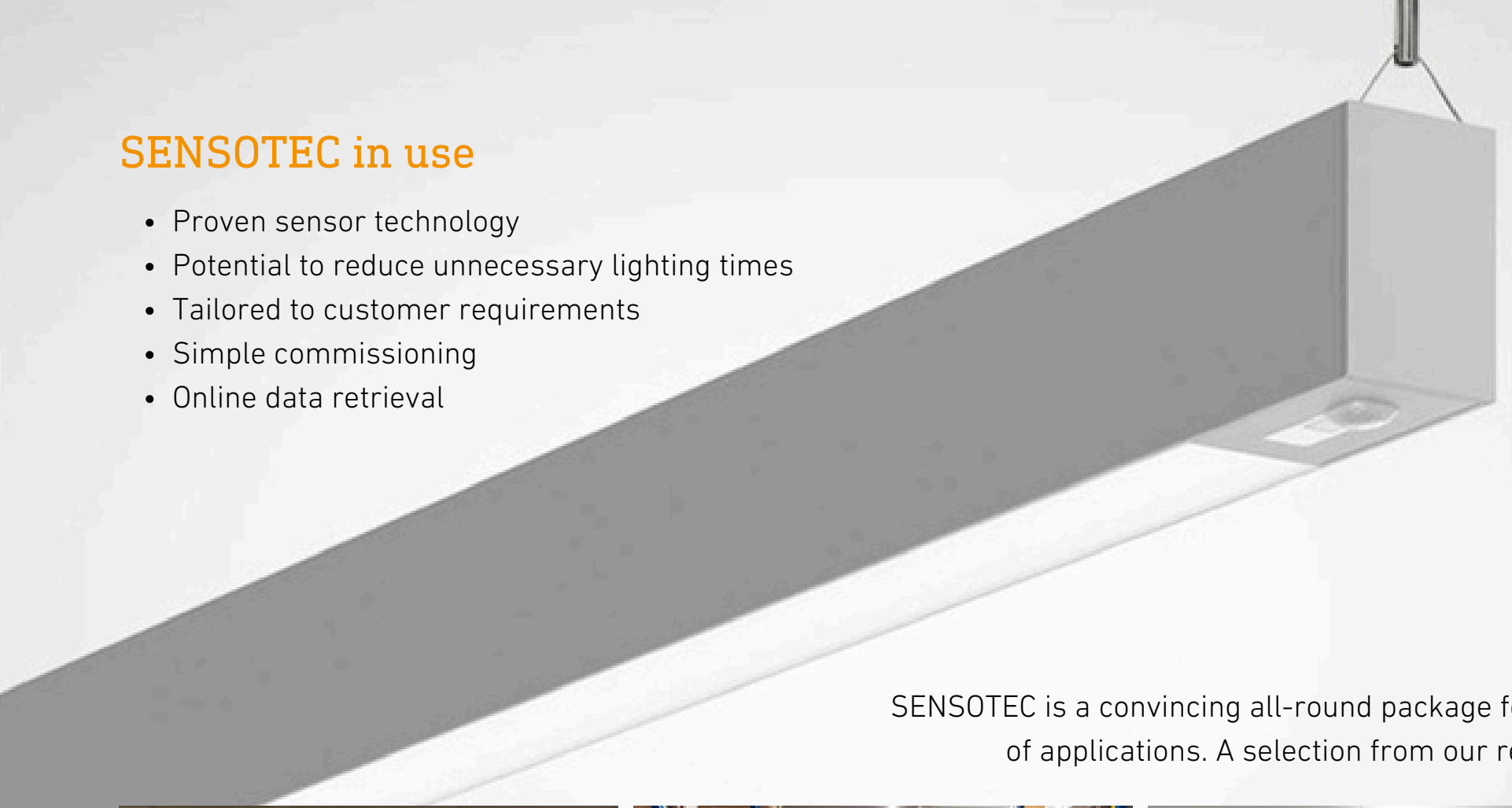

SENSOTEC in use

- Proven sensor technology
- Potential to reduce unnecessary lighting times
- Tailored to customer requirements
- Simple commissioning
- Online data retrieval

SENSOTEC is a convincing all-round package for a range of applications. A selection from our references:

We would be happy to advise you on the SENSOTEC portfolio.

Andrea Lachner

Get in touch with us.

+41 (0) 55 418 21 11

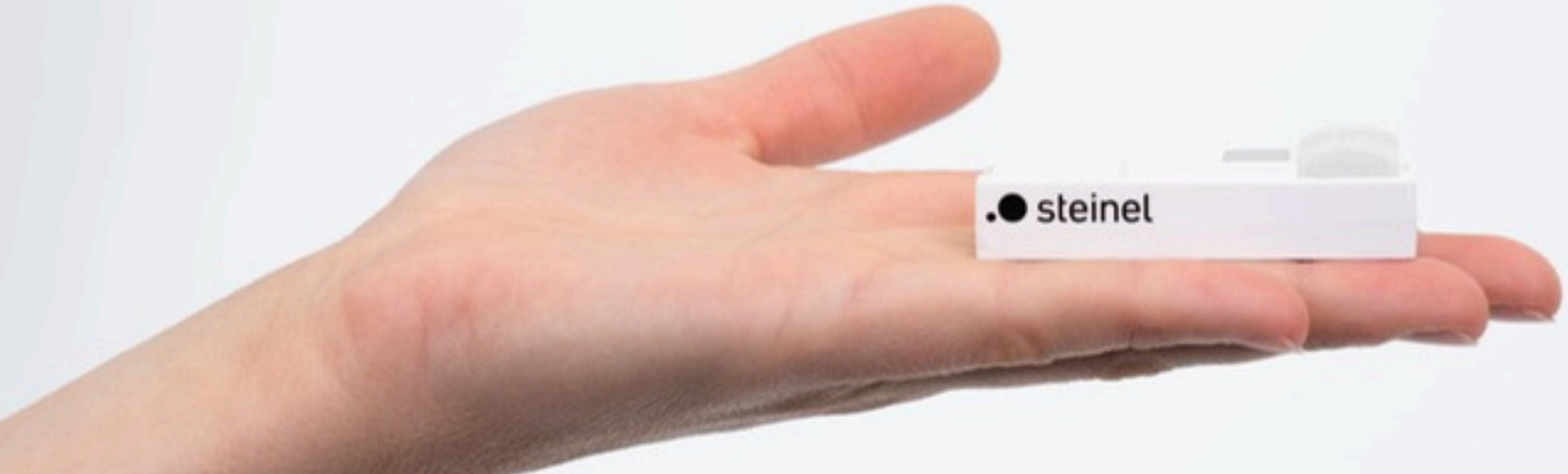

steinel